Global Knee™

Warnings and Instructions: Review carefully, proper application is required

⚠**Warning:** This device will not prevent or eliminate risk of injury. Do Not Overtighten. If swelling, pain, skin irritation, or an unusual reaction occurs, discontinue use immediately and consult your medical professional.

Care: Hand wash using mild soap. Rinse thoroughly. Air dry only. Do not tumble dry.

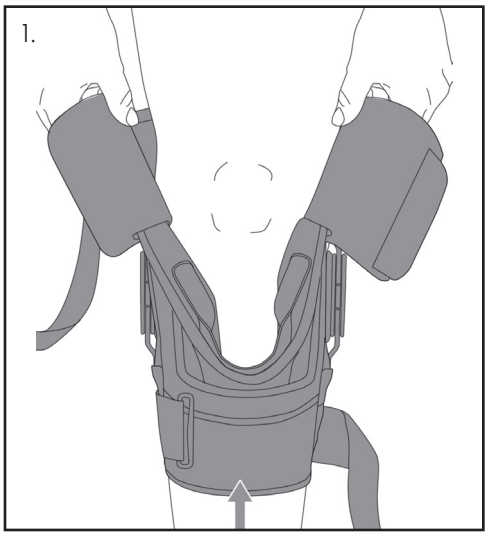

1. Loosen all straps including the inside flap, and slide brace on leg. Apply optional gel buttress to inside of buttress flap only if recommended by your health care practitioner. See buttress application instructions included with buttress.

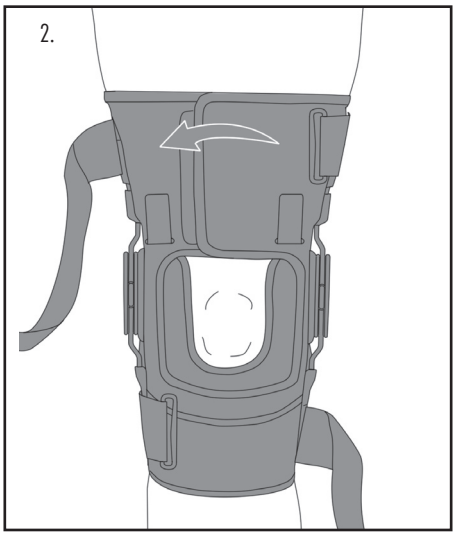

2. With leg fully extended center brace on knee. Pull and fasten upper flap. Inside buttress flap should be located just below the patella.

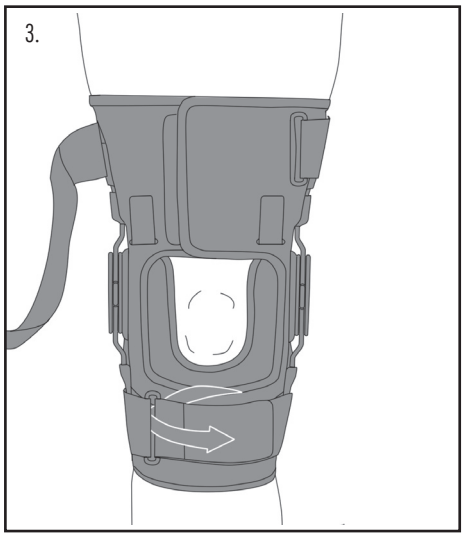

3. Pull lower strap through loop lock and fasten.

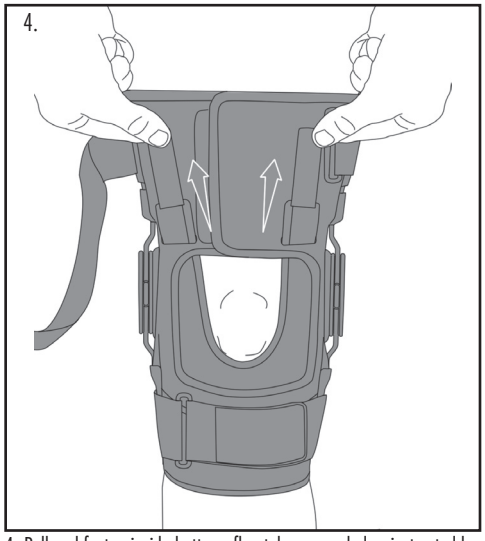

4. Pull and fasten inside buttress flap tabs as needed or instructed by your care provider.

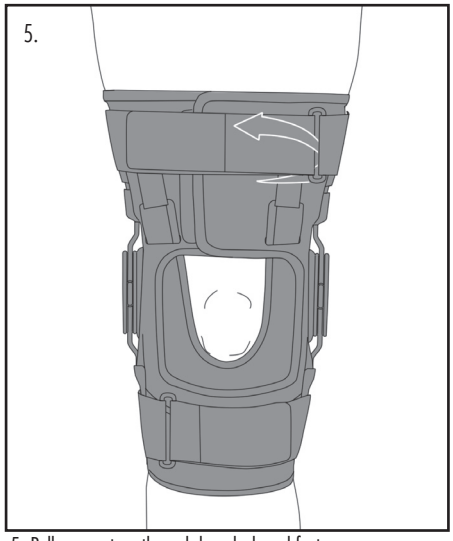

5. Pull upper strap through loop lock and fasten.

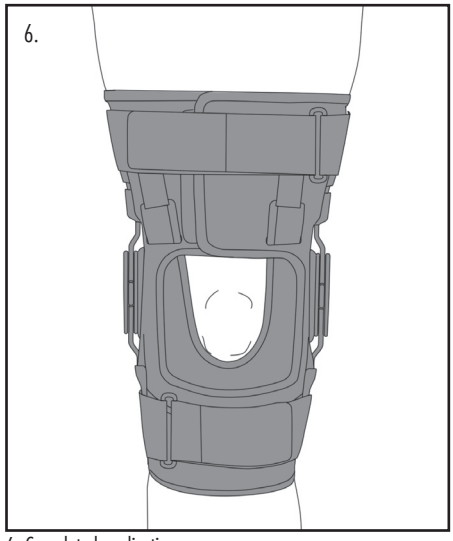

6. Completed application.

See Instructions on How to Adjust the Hinges Range of Motion on Back

Scan for video

© 2023 Weber Orthopedics Inc. DBA Hely & Weber all rights reserved

Adjusting the Range of Motion Hinges

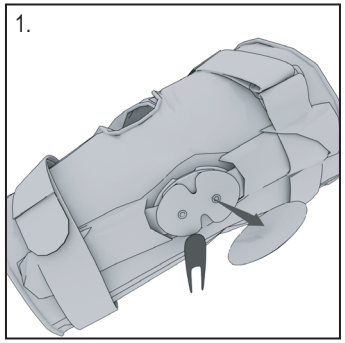

1. To remove the hinge cover cap, insert the provided tool into the space in the back of the hinge. The cap will come off using a twist or pry motion.

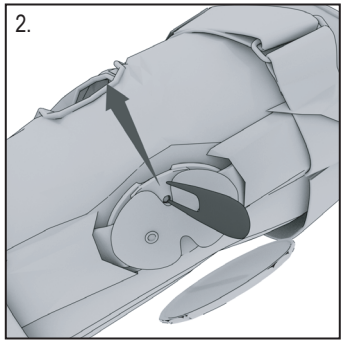

2. Remove the E10 stops that come pre-installed.

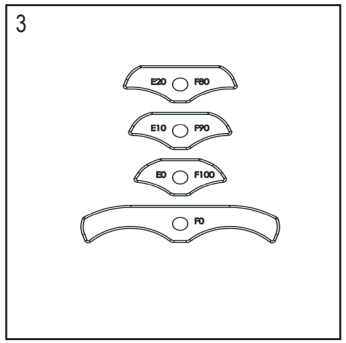

3. Choose the hinge stops with the desired degrees of extension and flexion.

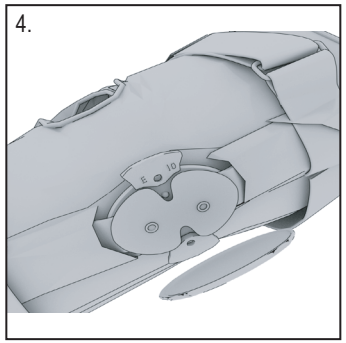

4. Install the extension stop (E) on the extension stop side of the hinge, and the flextion stop (F) on the flexion stop side of the hinge. The stops for both hinges must be set to the same settings.

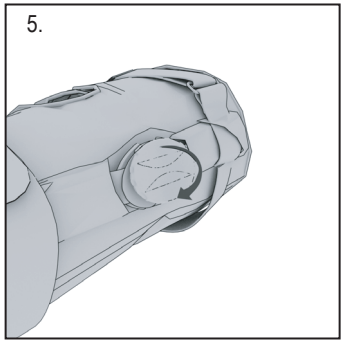

5. Apply the front edge of the cap to the hinge plate first, then press the posterior side to secure.

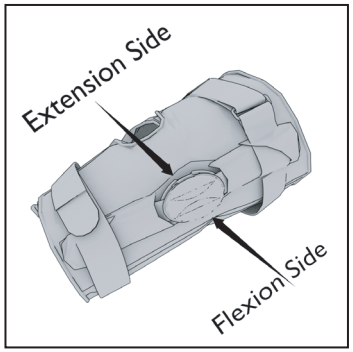

2022 Hely & Weber